DESIGN BRIEF
ELECTROMAGNETIC SCULPTURAL PENDULUM LIGHT

BACKGROUND

There are existing products that utilize a swinging motion to many ends. Swinging motion can be used in dynamic sculpture, in lighting or furniture, as a teaching aid in physics classes, in small toys, in recreational facilities, as a decorative feature, and even for hypnosis. Electromagnetic fields offer an efficient and quiet way to create subtle movements in products. They allow for simplicity in form and remove the need for complex moving parts such as motors. Swinging can be created very effectively and quietly with the use of an electromagnetic field.

OPPORTUNITIES

The opportunity here is to create a unique and beautiful object that utilizes electromagnetic swinging and light. Whether as a novelty decoration, sculptural piece, or for a more useful function, the application of this technology presents great opportunity for innovation. There are existing patents for swinging movements in various forms; electromagnetic or otherwise. The most basic form of this is the electromagnetic pendulum drive patent. It describes a device for creating oscillating motion with an electromagnetic field. This initial patent was published in 1963, so it is safe for us to pursue use of this technology in another application. A handful of other patented products reference this initial patent such as the swinging sunflower toy, imitation candle with magnetic pendulum, electromagnetic swing, and the electromagnetically actuated swinging cradle. The two former examples are desk toys; the latter ones are infant care devices. All of these devices use electromagnetic fields to assist with swinging or oscillating motion. Similarly, the patent motorized swinging hammock assembly uses this motion but with a motor as opposed to a magnetic field. Our design project, simply stated, is an aesthetic exploration of dynamic lighting sculpture.

PATENT ABSTRACT
ELECTROMAGNETIC SCULPTURAL PENDULUM LIGHT

A small dynamic sculpture for ambient lighting. It is defined by form including a stand with a magnetic base, a hanging enclosure with electromagnetic and electronic components inside, and a fiber connecting the hanging object to the stand. The fiber connecting the hanging object to the stand has a relative stiffness to ensure the right type of swinging motion. The interaction between the hanging object and the magnetic base when turned on is to swing within the created magnetic field. The hanging object casts ambient light using LEDs.

CLAIMS

1 Pendulum meaning any object hanging from the apparatus. A pendulum may be comprised of an enclosure with internal components.

2 Light meaning internal components of pendulum that produce light.

3 Electromagnetic meaning internal components of pendulum that allow it to oscillate by creating a magnetic field that interacts with the magnet contained within the base of the stand. (figure 4, figure 5)

4 Sculptural pertaining to the articulated form of the stand to afford swinging movement and to the decorative nature of the apparatus. (figure 2, figure 3)

5 All powered components, described in claims 2 and 3 but not limited to, are contained within the enclosure, described in claim 1.

6 Pendulum, described in claim 1, hangs from stand described in claim 4, with a stiff fiber to allow for proper motion (figure 1, figure 2).

7 Utile and novel due to combination of sculptural form, swinging motion, and ambient lighting.

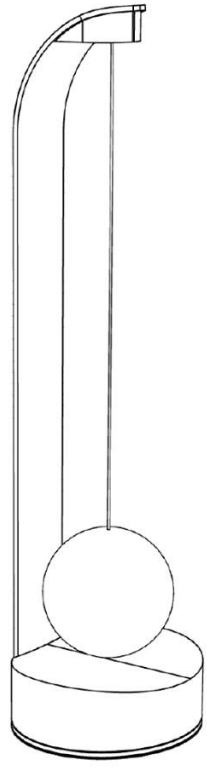

Figure 1

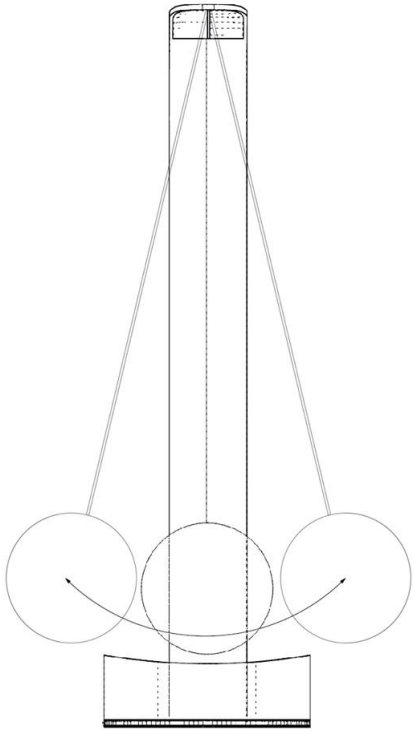

Figure 2

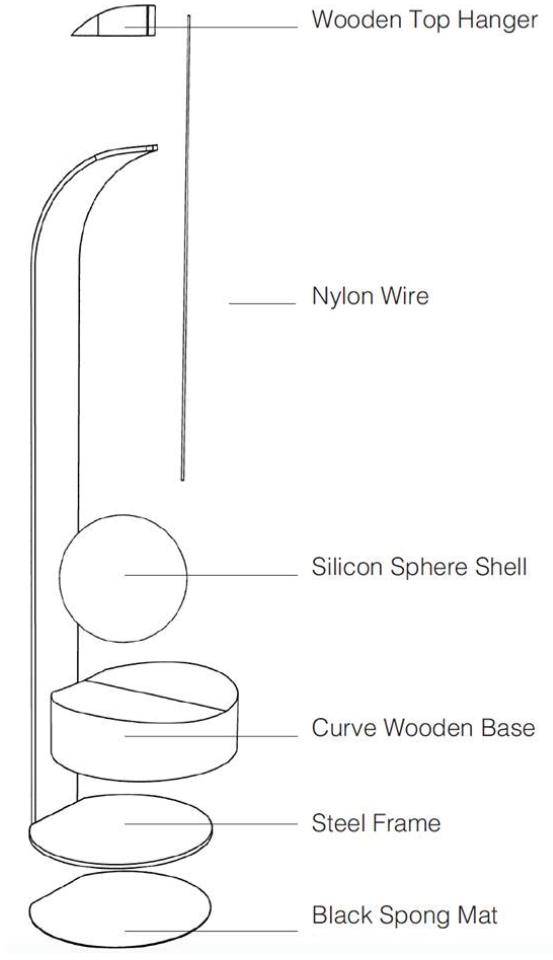

Figure 3

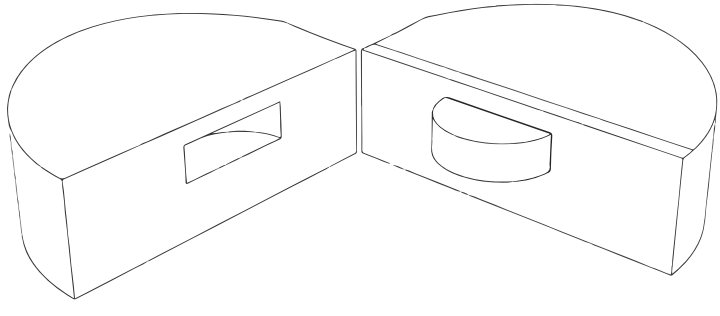

Figure 4

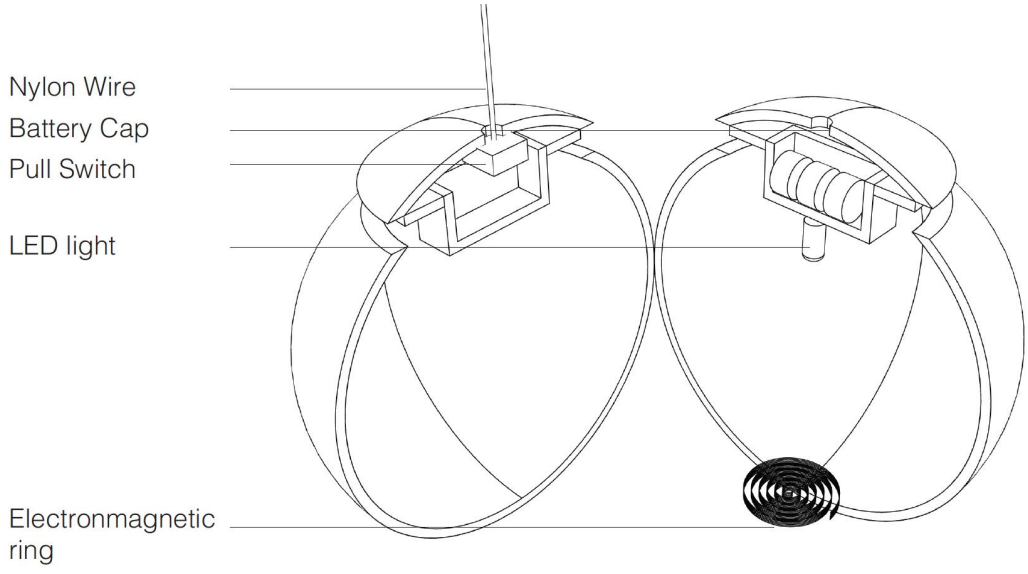
Nylon Wire
Battery Cap
Pull Switch
LED light
Electronmagnetic ring

Figure 5

DESIGN REGISTRATION DESCRIPTION

ELECTROMAGNETIC SCULPTURAL PENDULUM LIGHT

The design lies in the configuration of the pendulum, wire, base and connected stand as shown in the appended drawings in which: Figure 1 is a left-hand side view thereof; Figure 2 is a front view thereof.

Figure 1

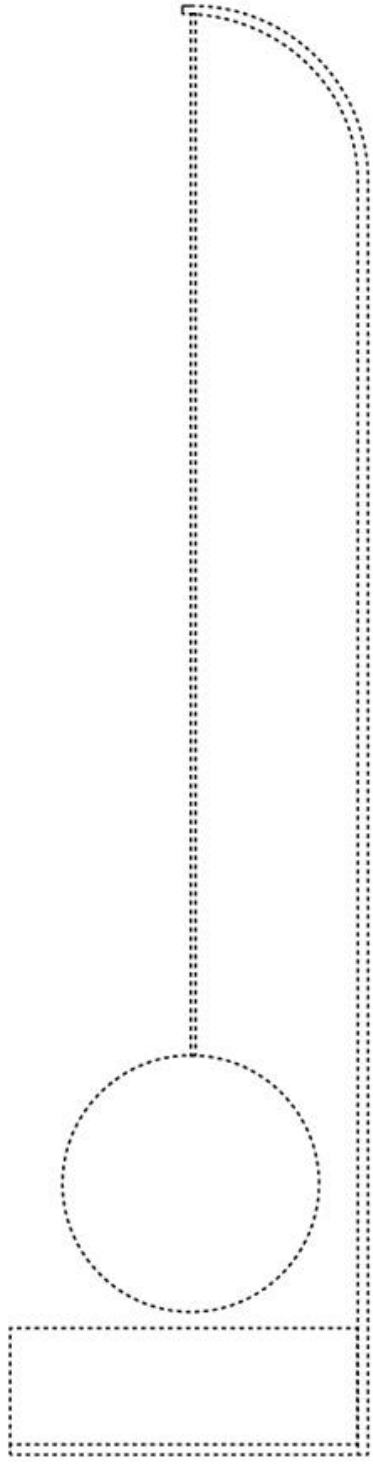

Figure 2